East African Scholars Multidisciplinary Bulletin
Abbreviated Key Title: East African Scholars Multidiscip Bull
ISSN: 2617-4413 (Print) | ISSN 2617-717X (Online)
Published By East African Scholars Publisher, Kenya

OPEN ACCESS

Volume-3 | Issue-2 | Feb-2020 | DOI: 10.36349/easmb.2020.v03i02.003

Review Article

The Effect of Value and Trust Perception on Customer Satisfaction and Its Impact on Consumer Loyalty in Staying at Grand Nanggroe Hotel in Banda Aceh, Indonesia

M Yusuf[1], A. Rahman Lubis[1], Muslim A Djalil[1] and Sorayanti Utami[*1]

[1]Magister Management Program, Faculty of Economics and Busines,Universitas Syiah Kuala, Banda Aceh, Indonesia

Article History
Received: 04.02.2020
Accepted: 12.02.2020
Published: 29.02.2020

Journal homepage:
https://easpublisher.com/easmb

Quick Response Code

Abstract: The purpose of this study is to find out:the perceived value of customer loyalty to stay and investigate the influence of trust on customer loyalty to stay, the perceived value on customer satisfaction overnight, trust on customer satisfaction overnight, customer satisfaction on customer loyalty to stay, perceived value on consumer loyalty through overnight customer satisfaction and trust on customer loyalty through customer satisfaction staying at the Hotel.The object of this research is the perception of value, customer satisfaction and customer loyalty to stay overnight. The results of the study prove that descriptively the perception of value, trust, customer satisfaction and consumer loyaltyis positively perceived by consumers, or all variables of this study get a good response from consumers. It also indicated that perceived value and trust have a significant influence on brand loyalty staying in the hotel either directly or indirectly through moderating variable of customer satisfaction. In addition, it also confirms that there is an indirect effect of perceived value, trust in consumer loyalty through consumer satisfaction of Grand Nanggroe Hotel Banda Aceh.

Keywords: Perception of Value, Trust, Satisfaction, Consumer Loyalty.

Copyright @ 2020: This is an open-access article distributed under the terms of the Creative Commons Attribution license which permits unrestricted use, distribution, and reproduction in any medium for non commercial use (NonCommercial, or CC-BY-NC) provided the original author and source are credited.

INTRODUCTION

In principle, a hotel is a form of service trade. As a service industry, every hotel entrepreneur will try to provide maximum service for his guests. Not to forget in terms of welcoming domestic and foreign tourists, the development of hotels is growing rapidly in Banda Aceh City.

Hotels are a type of commercial accommodation that is very well known and is actually very much needed by people who travel a considerable distance from where they live. Hotels provide comfort just as consumers are in their own homes, even more than those hotels nowadays not only provide lodging services but also become a restaurant, gym, meeting place, wedding, etc. The function of the hotel is only as a place to stay or rest for those who have traveled far and do not have a relationship at the destination or for those who intentionally want to travel to certain areas. But over time, the function of the hotel has increased or increased.

In the business world if a company cannot formulate a business strategy and marketing strategy properly, it will experience a defeat in competition where the marketing strategy is one of the main activities that can be done by entrepreneurs to maintain their survival, to develop and to gain profits, wrong One important aspect in marketing services, especially hotels, is to encourage prospective customers to stay overnight. The point is companies must be able to create a higher customer value compared with competitors; it is done in an effort to provide satisfaction to customers.

The phenomenon behind this research is the problem of consumer loyalty in utilizing hotel facilities in the city of Banda Aceh. This phenomenon occurs due to the growing number of hotels in the city of Banda Aceh, especially after post-tsunami, such as the Hermes Palace Hotel, Oasis Hotel, Grand Permata Hati Hotel, Nanggroe Hotel and Sultan Hotel. So that the existence of these hotels resulted in increasingly fierce competition for hotels, so that it has an impact on

***Corresponding Author:** Sorayanti Utami Email: utami_ut[at]yahoo.co.id

consumer loyalty in choosing hotels as temporary accommodation facilities and for other events. Consumer loyalty problems also occur in the Grand Nanggroe Hotel Banda Aceh, this can be seen from the hotel occupancy rate that does not reach the target set by the hotel manager.

The development of the tourism sector in Aceh Province is part of national development and is related to the development of other sectors. Therefore the success of tourism determines the success of national development. The government is committed to increasing tourism development as a development sector that can be relied on to increase foreign exchange revenues, expand and evenly spread business opportunities and employment opportunities, especially for local communities, encourage regional development, introduce nature, values and culture, preserve nature and the environment and nurture love the country.

Aceh Province located at the end of Sumatra is one of the tourist visit areas in Indonesia, in the current Development era Aceh plays a role and develops the tourism sector in accordance with the government's goal to make this sector one of the leading sectors in foreign exchange revenues for the Banda Aceh City and also Aceh Province in general. The Aceh Province, dubbed the Veranda of Mecca, holds various tourism potentials, both natural, marine, historical and cultural.

One factor that determines the level of success and quality of the company is the company's ability to provide services to customers. The success of the company in providing quality services to its customers, achieving high market share, and increasing the company's profit are largely determined by the approach used. The consequences of the service quality approach of a product have an important essence for the company's strategy to defend them and achieve success in the face of competition. The progress of civilization and the lifestyle of society, as if make a locomotive that has attracted the business world to run fast. In this era of globalization, competition between companies in the business world is getting tougher. Basically, competition is a positive thing. In the business world, with competition each company will be increasingly motivated to race to improve its quality so as not to sink into the competition.

To build customer satisfaction, measurement and identification of factors that influence customer satisfaction is very important. So that many studies have been conducted to measure and identify customer satisfaction. So that there are still little or little known factors of consumer satisfaction that influence consumer behavior in the hospitality industry. So, the hotel is a temporary home for tourists that as far and along the journey requires comfort, good service, sanitation hygiene that guarantees health and things of daily needs.

To give satisfaction to consumers in hotels, the hotel manager has provided rooms with various facilities and satisfying services. This is so that consumers who use certain rooms feel comfortable according to the rates imposed on each room. The services offered to customers include: Room Service for 24 hours, AC facilities that can be controlled according to desire, carpeted room space, private bathroom with bathtub and shower consisting of cold water and warm water, refrigerator (only available in Suite Room and Executive Room and Duluxe Room), each room is equipped with a color TV, telephone with IDD system.

LITERATURE REVIEW

Value Perception

Value is defined as a thorough assessment of the benefits of a product, which is based on customer perceptions and what has been given by the product. What is needed by the customer is the service and benefits of the product. In addition to money, customers spend time and energy to get a product (Rangkuti, F, 2012, p. 31).

The value delivered by the customer can be defined as the difference between the total value of the customer that the customer receives from the product or service and the total customer cost incurred from assessing, receiving, using and removing that product or service (Roig et al, 2010).

This value cannot be determined objectively by the seller but can only be felt by customers who use the product or receive services. In order to buy a product or service from a company, customers will consider and compare the net customer value delivered as a key decision criterion select their best product or service provider. Therefore, modern marketing practitioners focus more on

providing value to their customers as a key to their organization's success (Christopher, 2011).

To measure the level of perceived value, two main approaches can be found. The first approach defines the value perceived as a construct consisting of two parts, one is the benefit received and the other is the sacrifice made (Cronin et al, 2010).

The second approach views the value perceived by customers as multidimensional (Roig et al. 2010) defining values that are perceived as multidimensional consisting of four core values, which are conditional social, emotional, functional, and epistemic. Functional value is the perceived utility of the product or service. Emotional value is an affective feeling or state acquired by consumption experience. Social value is acceptance or utility at the individual level of relations with the social environment. Epistemic value is the capacity of a product or service to surprise, arouse curiosity or fulfill the desires of knowledge. Finally, conditional values refer to conjunctural or situational factors such as certain diseases or social situations.

Trust

According to Ryan (2012: 34) trust is built because of the expectation that other parties will act according to the needs and desires of consumers. When someone trusts another party, they are sure that hope will be fulfilled and there will be no more disappointment. Lau and Lee (2013: 340) state that trust in a brand is the willingness of consumers to trust the brand with all the risks because of the expectations promised by the brand in providing positive results for consumers.

Trust or trust is the basis of a business, where a business transaction will occur if there is trust between each party. Trust does not appear suddenly, but must be built from the beginning. This belief is also a driver in an effective relationship. Trust is defined as the willingness to awaken oneself to relationships with partners based on beliefs (Moorman, 2014).

Trust in salespeople is customer trust in the context of sales relationships as a belief that salespeople can be relied upon to behave in such a way as to the long-term interests of customers to be served (Crosby, 1990). Trust is a feeling that must also be owned by each recipient of a particular service or brand.

Consumer Satisfaction

Customer satisfaction has become part of the goals of most companies. In addition to getting the maximum profit or profit at the same time so that the company is able to face increasingly fierce competition in order to maintain the survival of the company. In line with that, the quality of services, especially for service companies, is an important thing in order to give more satisfaction to customers and ultimately become added value for the company itself (Jumidah, 2011).

It has become a common belief, especially in the business world, that customer satisfaction is one of the keys to the success of a business. This is because by satisfying consumers, organizations can increase profits and gain a wider market share (Barsky, 2007) because of that trust, many studies are conducted to measure customer satisfaction, so that many definitions are given in the term "customer satosfaction" or customer satisfaction. Two definitions of customer satisfaction which are considered quite representative are quoted below.

The product is perceived to be performance matches a buyer 'expectation. If the product performance falls short of expectation, the buyer is dissatisfied. If performance matches or exceeds expectation, the buyer is satisfied or delighted (Kotler, 2007: 10).

While Zeithaml et al (2007) based on the study conducted defines satisfaction as follows: Customer satisfaction is a post comsuption evaluating judgment concerning a specific product or service.

From these definitions, it can be seen that there is a similarity in meaning that customer satisfaction is a feeling or emotional assessment of the customer for the use of a product or service where their expectations and needs are met. If consumers feel that what is obtained is lower with what is expected to be negative disconfirmation) then the consumer will be dissatisfied, on the contrary if the consumer is more than what he expected, then the consumer will be satisfied while the situation is what is expected, then the consumer feeling dissatisfied and satisfied (neutral).

Consumer Loyalty

Loyalty can be interpreted as loyalty, namely one's loyalty to an object. Loyalty describes the willingness of customers to use goods or services repeatedly and exclusively, and voluntarily recommend these products or services to other consumers (Lovelock and Wright, 2013).

Loyalty is the extent to which a customer shows a positive attitude towards a product or service, is committed to a particular product or service, and intends to buy it in the future (Women and Minor, 2012). Customer loyalty to the company will greatly help the company to survive in business competition (Leverin and Liljander, 2006).

Loyalty cannot appear in a short time. Companies must be able to consistently maintain customer satisfaction in the long run. Having loyal customers will certainly be very profitable for the company (Eisingerich and Bell, 2006).

RESEARCH METHOD

Population and Respondents

This research was conducted in Banda Aceh City. The object of the research is descriptively the perception of value, trust, customer satisfaction and consumer loyalty of Grand Nanggroe Hotel Banda Aceh is perceived positively by consumers, or all variables of this study get a good response from consumers at the Grand Nanggroe Hotel Banda Aceh.

Data Analytical Tools

Data analysis and interpretation of research are intended to answer research questions in order to reveal certain social phenomena. Data analysis is the process of simplifying data into a form that is easier to read and implement. The method chosen to analyze the data must be in accordance with the research pattern and the variables to be studied. In this study, to analyze the data used The Structural Equation Modeling (SEM) of the AMOS 20.0 statistical software package in the model and hypothesis assessment. Equation model SEM is a set of statistical techniques that allow testing of a series of relations that are relatively "complicated" simultaneously (Ferdinand, 2006: 181).

RESULTS AND DISCUSSIONS

RESULTS

Analysis of Structural Equation Modeling (SEM)

The next analysis is the analysis of SEM in full model, after an analysis of the level of uni dimensionality of the indicators forming latent variables was tested by confirmatory factor analysis. Analysis of the results of data processing at the full stage of the SEM model is carried out by conducting suitability tests and statistical tests. The results of data processing for full analysis of SEM models are shown in Figure 1:

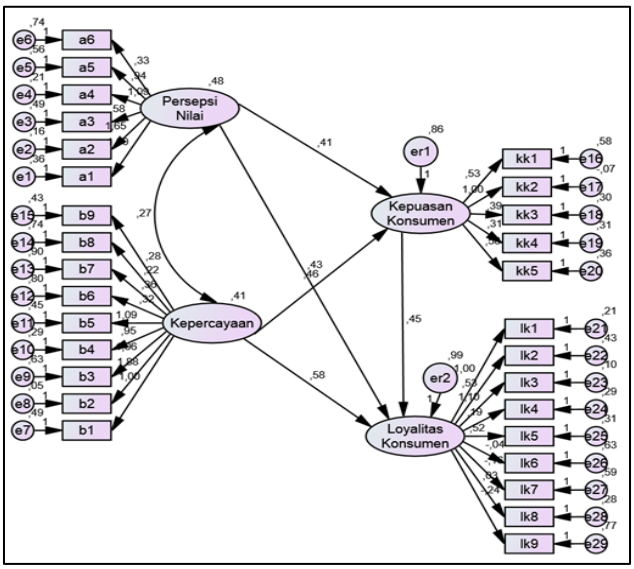

Figure. 1. Structural Equation Model (SEM) Test

Effect of Value Perception on Customer Satisfaction

The estimation parameter for testing the effect of perceived value on customer satisfaction shows a CR value of 4.086 and a probability of 0.000. The two values obtained meet the requirements for acceptance H1, which is a CR value of 4.086 which is greater than 1.97 and a probability smaller than 0.05. Thus it can be concluded that the perception of value at the Hotel influences consumer satisfaction.

Effect of Consumer Trust on Consumer Satisfaction

The estimation parameter for testing the effect of consumer trust on customer satisfaction shows a CR value of 4.086 and a probability of 0.000. Both of these values are obtained fulfilling the conditions for acceptance of H2, namely the CR value of 4.086 which is greater than 1.97 and a probability smaller than 0.05. Thus it can be

concluded that consumer trust has an effect on consumer satisfaction.

Effect of Consumer Satisfaction on Consumer Loyalty

The estimation parameter for testing the effect of customer satisfaction on consumer loyalty shows a CR value of 4.202 and a probability of 0.000. Both of these values are obtained fulfilling the conditions for acceptance of H2, namely the CR value of 4.202 which is greater than 1.97 and the probability is smaller than 0.05. Thus it can be concluded that consumer satisfaction will affect consumer loyalty.

Effect of Value Perception on Consumer Loyalty

The estimation parameter for testing the effect of perceived value on consumer loyalty shows a CR value of 4.007 and a probability of 0.000. Both of these values are obtained fulfilling the conditions for acceptance of H4, which is a CR value of 4.007 which is greater than 1.97 and a probability smaller than 0.05. Thus it can be concluded that the perception of value will affect consumer loyalty.

Effect of Consumer Trust in Consumer Loyalty

The estimation parameter for testing the effect of communication on consumer loyalty shows a CR value of 4,614 and a probability of 0,000. Both of these values are obtained fulfilling the conditions for acceptance of H5, namely the CR value of 4.614 which is greater than 1.97 and the probability is smaller than 0.05. Thus it can be stated that consumer trust possessed by all consumers stays at the Grand Nanggroe Hotel Banda Aceh.

Conclusions and Recommendations

Conclusions

1. The results of the study prove that descriptively the perception of value, trust, customer satisfaction and consumer loyalty of the Grand Nanggroe Hotel Banda Aceh is perceived positively by consumers, or all variables of this study get a good response from consumers.
2. The perceived value has an influence on consumer satisfaction.
3. Trust in consumer has an effect on satisfaction. This therefore implies that consumer trust will further enhance consumer satisfaction
4. The perceived value affects consumer loyalty
5. The trust influences the consumer loyalty sumer loyalty.
6. The consumer satisfaction has an effect on the consumer loyalty. It means that the more satisfied then consumers, the more it will increase consumer loyalty
7. There is an indirect influence on perceived value, trust in consumer loyalty through customer satisfaction. The outcome confirms that the perception of value and trust can have an impact on increasing consumer loyalty with the satisfaction felt by consumers

Recommendations

1. In order to increase customer satisfaction and consumer loyalty based on perceived value variables, it should be improved the ability of products offered to consumers, so that these products can create a sense of pride for consumers who stay overnight.
2. In regard of increasing consumer loyalty based on trust variables, so what must be considered is that the Hotel must boast consumer confidence so that the services provided can be remembered in consumer memory.
3. To increase customer satisfaction, the company needs to improve employee clarity in providing services to consumers.
4. In order to increase consumer loyalty, the hotel must be able to provide recommendations to consumers to invite their family members and friends to use the hotel services where I save.
5 To improve the quality of products offered to consumers, the hotel should be able to increase trust in consumers, so that the money paid by consumers can are guarantee safety and all transactions can be accounted for and improving service quality better.

References

1. Candra Adi Susilo (2009). Analisis Pengaruh Citra, Nilai, Kualitas Pelayanan, dan Kepuasan Pelanggan (Studi Kasus pada Toko Buku Gramedia Pandanaran Semarang). *Jurnal Manajemen dan Bisnis. 12*(2).
2. Chen, Shu-Ching dan Quester, Pascale. G. (2015). The Relative Contribution of Love Trust Towards Customer Loyalty. *Journal Homepage;* www.elsevier.com/locate/amj. Japan: Ritsumeikan Asia Pacific.
3. Cheng, Joun. et al. (2008). *Study on The Influencing Factors of Online Shopping*. Published by Atlantis Press. Departement of Business.

4. Chih-Hsing Sam Liu, dan Tingko Lee, (2011), Service Quality and Relationship Perception of Service: Influence on Word of Mouth and Revisit Intention. *International Journal of Contemporary Hospitality Management*, *10* (4):213-27.
5. Christopher, Martin. 2011. *Logistics and Supply Chain Management* Fourth Edition. London. Prentice Hall.
6. David Aaker (2012), *Ekuitas Merek*. Edisi Indonesia. Jakarta : Mitra Utama.
7. Ferdinand, A. T. 2006. *Metode Penelitian Manajemen; Pedoman Penelitian untuk Penulisan Skripsi, Tesis, dan Disertasi*. Semarang: BP UNDIP.
8. Ghozali, I. 2013. *Aplikasi Analisis Multivariate dengan Program SPSS*. Semarang: RPUD.
9. Hair, Joseph. F. et al. 2006. *Multi Variate Data Analysis*. Fith Edition. Jakarta: Gramedia Pustaka Utama.
10. Harcar, T, Kara, A., Rojas-Méndez, J.I., dan Kucukemiroglu, O (2009), "Consumer Preferences of Store Brands: Role of Prior Experiences and Value Consciousness", *Journal of Targeting, Measurement and Analysis for Marketing*, Vol. 17, 127 – 137.
11. Haslinda Hasan, (2014) *Effects of Perceived Value and Trust on Customer Loyalty towards Foreign Banks in Sabah*, Malaysia
12. Hirschman, Elizabeth C. 2006. Primitive Aspects of Consumption in Modern American Society. Journal of Consumer Research.
13. John T. Bowen dan Shiang-Lih Chen, (2014) The Relationship Between Customer Loyalty and Customer Satisfaction. *International Journal of Contemporary Hospitality Management*, *13* (5):213-217.
14. Kotler, P. (2012). *Marketing Management: Analysis. Planning. Implementation and Control*. (Ninth Edition). New Jersey: Prentice Hall. Inc.
15. Kusnendi, MS. (2008). *Model-Model* Persamaan *Struktural*. Bandung: Alfabeta.
16. Malhotra K Naresh, (2006), *Riset Pemasaran Pendekatan Terapan*, PT. Indeks Kelompok Gramedia, Jakarta.
17. Nazir, Moh. (2013). *Metode Penelitian*. Jakarta: Ghalia Indonesia.
18. Oliver Richard dan Vanessa, (2007), *Satisfaction: A Behavioral Perpective On The Consumer*, The McGraw-Hill Companise, Inc : New York.
19. Pavlou, J. (2001). *Perilaku Konsumen*. Jakarta: Indeks.
20. Pervin, Lawrence. A dan Cervone, Daniel. (2011). *Kepribadian; Teori dan Penelitian*. Edisi 10. Terjemahan dalam Bahasa Indonesia. Jakarta: Salemba Humanika.
21. Ratna Prima Lita,(2012), Pengaruh Kepercayaan pada Komitmen Loyalitas Pelanggan. *Jurnal Manajemen dan Bisnis*. 2. (14).
22. Relationship between Customer Loyalty and Customer Satisfaction," *International Journal of Contemporary Hospitality Management*, *13*(5):213-217.
23. Richard A.L. Caldarola, (2013), The Interaction Of Three Dimensions Of Trust, Relationship Selling, Team Selling and B2B Sales Success In The European Market
24. Roig-Tierno, N., Baviera-Puig, A., Buitrago-Vera, J., Mas-Verdu, F. 2010. The Retail Site Location Decision Process Using Gis And The Analytical Hierarchy Process. *Applied Geography*, Volume 40, June 2013, Pages 191-198.
25. Rudyanto, (2012), Pengaruh Nilai Relasional, Kepercayaan, dan Pemasok Terhadap Hubungan Jangka Panjang, Komitmen dan Loyalitas Pelanggan pada Biro Perjalanan Wisata. *Jurnal Manajemen dan Bisnis*. Vol 2. N0. 14.
26. Ryan, Damian., & Jones, Calvin. (2012). Understanding Digital Marketing: Marketing Strategies for Engaging The Digital Generation. United States: Kogan Page Limited
27. Sekaran, Uma. (2006). Metodologi Penelitian untuk Bisnis. Jakarta: Salemba Empat.
28. Sri Setyo Iriani. (2014). Pengaruh Persepsi Nilai dan Persepsi Risiko Terhadap Niat Beli *Kosmetik Organik*. *Jurnal Ekonomi*.*3*(5). Pontianak: Universitas Tanjungpura.